Correspondence

Identification of Nonlinear Dynamic Systems Using Functional Link Artificial Neural Networks

Jagdish C. Patra, Ranendra N. Pal,
B. N. Chatterji, and Ganapati Panda

***Abstract*—In this paper, we have presented an alternate ANN structure called functional link ANN (FLANN) for nonlinear dynamic system identification using the popular back propagation algorithm. In contrast to a feed forward ANN structure, i.e., a multilayer perceptron (MLP), the FLANN is basically a single layer structure in which nonlinearity is introduced by enhancing the input pattern with nonlinear functional expansion. With proper choice of functional expansion in a FLANN, this network performs as good as and in some cases even better than the MLP structure for the problem of nonlinear system identification.**

***Index Terms*— Artificial neural networks, computational complexity, nonlinear dynamic system identification.**

I. Introduction

Because of nonlinear signal processing and learning capability, artificial neural networks (ANN's) have become a powerful tool for many complex applications including functional approximation, nonlinear system identification and control, pattern recognition and classification, and optimization. The ANN's are capable of generating complex mapping between the input and the output space and thus, arbitrarily complex nonlinear decision boundaries can be formed by these networks.

In contrast to the static systems that are described by algebraic equations, the dynamic systems are described by difference or differential equations. It has been reported that even if only the outputs are available for measurement, under certain assumptions, it is possible to identify the dynamic system from the delayed inputs and outputs using an multilayer perceptron (MLP) structure [4]. The problem of nonlinear dynamic system identification using MLP structure trained by BP algorithm was proposed by Narendra and Parthasarathy [9], [10]. Nguyen and Widrow have shown that satisfactory results can be obtained in the case of identification and control of highly nonlinear Truck-Backer-Upper system using an MLP [11].

Originally, the functional link ANN (FLANN) was proposed by Pao [12]. He has shown that, this network may be conveniently used for function approximation and pattern classification with faster convergence rate and lesser computational load than an MLP structure. The FLANN is basically a flat net and the need of the hidden layer is removed and hence, the BP learning algorithm used in this network becomes very simple. The functional expansion effectively increases the dimensionality of the input vector and hence the hyperplanes generated by the FLANN provides greater discrimination capability in the input pattern space. Pao *et al.* have reported identification and control of nonlinear systems using a FLANN [13]. Chen and Billings [6] have reported nonlinear dynamic system modeling and identification using three different ANN structures. They have studied this problem using an MLP structure, a radial basis function (RBF) network and a FLANN and have obtained satisfactory results with all the three networks.

Several research works have been reported on system identification using MLP networks in [1], [2], and [18] and using RBF networks in [5] and [7]. Recently, Yang and Tseng have reported function approximation with an orthonormal ANN using Legendre functions [19]. Nonlinear system identification using a FLANN structure has been reported in [16]. Besides system identification, some other applications of FLANN in digital communications may be found in [14] and [15].

In this paper, we propose a novel alternate FLANN structure for identification of nonlinear static and dynamic systems. The proposed approach is different from that of [6] and [13]. Here, we have considered trigonometric polynomials for functional expansion, and the output node contains a tan-hyperbolic nonlinearity. Where as, in [13], Pao *et al.* have taken products of a random vector with the input vector for the same purpose. Chen and Billings [6] have utilized a FLANN structure with polynomial expansion in terms of outer product of the elements of the input vector for this purpose, and the output node has linear characteristics. The performance of the proposed FLANN structure has been compared with that of an MLP structure with simulation by taking system model examples of Narendra and Parthasarathy [9] and [10]. This type of performance comparison has not been attempted so far.

II. Characterization and Identification of Systems

In system theory characterization and identification are fundamental problems. When the plant behavior is completely unknown, it may be characterized using certain model and then, it's identification may be carried out with some networks like MLP or FLANN using some learning rules such as BP algorithm.

The primary concern of the problem of characterization is the mathematical representation of the system under study. Let us express the model of a system by an operator $\boldsymbol{P}$ from an input space $\mathcal{U}$ into an output space $\mathcal{Y}$. The objective is to categorize the class $\mathcal{P}$ to which $\boldsymbol{P}$ belongs. For a given class $\mathcal{P}, \boldsymbol{P} \in \mathcal{P}$, the identification problem is to determine a class $\hat{\mathcal{P}} \subset \mathcal{P}$ and $\hat{\boldsymbol{P}} \in \hat{\mathcal{P}}$ such that $\hat{\boldsymbol{P}}$ approximates $\boldsymbol{P}$ in some desired sense. The spaces $\mathcal{U}$ and $\mathcal{Y}$ are subsets of $\mathcal{R}^n$ and $\mathcal{R}^m$, respectively in a static system. Where as, in the case of dynamic systems they are assumed to be bounded Lebesgue integrable functions in the interval $[0, T]$ or $[0, \infty]$. However, in both cases, the operator $\boldsymbol{P}$ is defined implicitly by the specified input–output pairs [9].

A typical example of identification of static system is the problem of pattern recognition. By a decision function $\boldsymbol{P}$, compact input sets $U_i \subset \mathcal{R}^n$ are mapped into elements $y_i \in \mathcal{R}^m$ for $i = 1, 2, \cdots$, in the output space. The elements of U_i denote the pattern vectors corresponding to class y_i. Where as, in the case of a dynamic system, the input–output pairs of the time function $u(t), y(t), t \in [0, T]$, implicitly define the operator $\boldsymbol{P}$ describing the dynamic plant. The main objective in both type of identifications is to determine $\hat{\boldsymbol{P}}$ such

Manuscript received February 8, 1997; revised July 1, 1998. This paper was recommended by Associate Editor P. Borne.

J. C. Patra and G. Panda are with the Department of Applied Electronics and Instrumentation Engineering, Regional Engineering College, Rourkela, Orissa 769 008, India.

R. N. Pal and B. N. Chatterji are with the Department of Electronics and Electrical Communication Engineering, Indian Institute of Technology, Kharagpur, W.B. 721 302, India.

Publisher Item Identifier S 1083-4419(99)02293-1.

1083–4419/99$10.00 © 1999 IEEE

Authorized licensed use limited to: MALAVIYA NATIONAL INSTITUTE OF TECHNOLOGY. Downloaded on March 30,2022 at 10:12:57 UTC from IEEE Xplore. Restrictions apply.

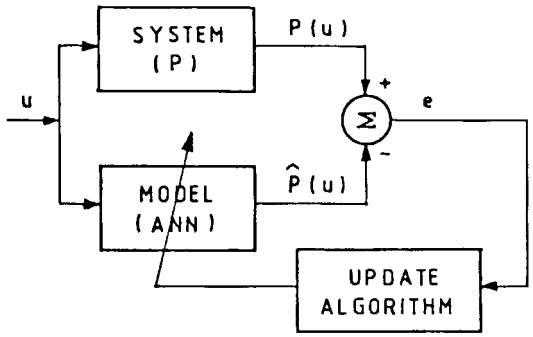

Fig. 1. Schematic of identification of static and dynamic systems.

that

$$\|y - \hat{y}\| = \|\boldsymbol{P}(u) - \hat{\boldsymbol{P}}(u)\| < \epsilon, \tag{1}$$

where $u \in \mathcal{U}$, ϵ is some desired small value >0, and $\|\cdot\|$ is a defined norm on the output space. In (1), $\hat{\boldsymbol{P}}(u) = \hat{y}$ and $\boldsymbol{P}(u) = y$ denote the output of the identified model and the plant, respectively. The error $e = y - \hat{y}$ is the difference between the observed plant output and the output generated by $\hat{\boldsymbol{P}}$.

In Fig. 1, a schematic diagram of system identification of a time invariant, causal discrete-time dynamic plant is shown. The input and output of the plant is given by u and $\boldsymbol{P}(u)(= y_p)$ respectively, where u is assumed to be an uniformly bounded function of time. The stability of the plant is assumed with a known parameterization but with unknown parameter values. The objective of the identification problem is to construct a suitable model generating an output $\hat{\boldsymbol{P}}(u)(= \hat{y}_p)$ which approximates the plant output y_p when subjected to the same input u so that the error e is minimum.

Four models for representation of SISO plants are introduced which may also be generalized for multivariable case. The nonlinear difference equations describing the four models are as follows:

- Model 1:

$$y_p(k+1) = \sum_{i=0}^{n-1} \alpha_i y_p(k-i) + g[u(k), u(k-1), \cdots, u(k-m+1)].$$

- Model 2:

$$y_p(k+1) = f[y_p(k), y_p(k-1), \cdots, y_p(k-n+1)] + \sum_{i=0}^{m-1} \beta_i u(k-i). \tag{2}$$

- Model 3:

$$y_p(k+1) = f[y_p(k), y_p(k-1), \cdots, y_p(k-n+1)] + g[u(k), u(k-1), \cdots, u(k-m+1)].$$

- Model 4:

$$y_p(k+1) = f[y_p(k), y_p(k-1), \cdots, y_p(k-n+1); + u(k), u(k-1), \cdots, u(k-m+1)].$$

Here, $u(k)$ and $y_p(k)$ represent the input and output of the SISO plant respectively at the kth time instant and $m \leq n$. In this study an MLP and a FLANN structure have been used to construct the functions f and/or g in (2) so as to approximate such mappings over compact sets. For the identification problem discussed in this paper, a series-parallel scheme has been utilized in which, the output of the plant, instead of the ANN model is fed back into the model during the training period for stability reasons [9].

III. The Multilayer Perceptron

The MLP is a feed forward network with one or more layer of nodes between its input and output layers. Consider an L-layer MLP [12] as shown in Fig. 2. This network may be represented by $\mathcal{N}^L_{n_0,n_1,\cdots,n_L}$, where $n_l, l = 0, 1, \cdots, L$ denote the number of nodes (excluding the threshold unit) in the input layer $(l = 0)$, the hidden layers $(l = 1, 2, \cdots, L-1)$ and the output layer $(l = L)$. Let $X^{(0)} = [x_0^{(0)} u_1 u_2 \cdots u_{n_0}]^T$ and $X^{(l)} = [x_0^{(l)} x_1^{(l)} \cdots x_{n_l}^{(l)}]^T$, represent the input vector and the lth layer output vector of the MLP, respectively. Here, $\{u_j\}$, $j = 1, 2, \cdots, n_0$ denote input pattern and $x_j^{(l)}$ denote the output of the jth node of lth layer. The threshold input is denoted by $x_0^{(l)}$ and its value is fixed at $+1$. The synaptic weight of the jth node of lth layer from the ith node of $(l-1)$th layer is denoted by $w_{ji}^{(l)}$. The activation function associated with all the nodes of the network (except the input layer) is the $\tanh$ function given by $\rho(S) = \tanh(S) = (1 - e^{-2S}/1 + e^{-2S})$. The partial derivative of $\rho(S)$ with respect to S is denoted by $\rho'(S)$ and is given by $\rho'(S) = (1 - \rho^2(S))$. The linear sum of the jth node of lth layer is denoted by $S_j^{(l)}$.

In the forward phase, at the kth time instant (here, the time index is omitted for simplicity of notation), the input pattern vector $X^{(0)}$ is applied to the network. Let the corresponding desired output be $\{y_j\}$, for $j = 1, 2, \cdots, n_L$. Since no computation takes place in the input layer the outputs of the input layer of the MLP is given by $x_j^{(0)} = u_j$ for $j = 1, 2, \cdots, n_0$. For other layers, $l = 1, 2, \cdots, L$, and $j = 1, 2, \cdots, n_l$, the outputs are computed as

$$x_j^{(l)} = \rho(S_j^{(l)}) \quad \text{and} \quad S_j^{(l)} = \sum_{i=0}^{n_{l-1}} w_{ji}^{(l)} x_i^{(l-1)}. \tag{3}$$

The estimated output is denoted by $\{\hat{y}_j\}$ and is given by $\{\hat{y}_j\} = \{x_j^{(L)}\}$ for all $j = 1, 2, \cdots, n_L$. The mean square error (MSE) is given by e^2/n_L where the error signal for the jth output is $e_j = y_j - \hat{y}_j$ and the instantaneous squared error is given by $e^2 = \Sigma_{j=1}^{n_L} e_j^2$.

In the learning phase, the BP algorithm minimizes the squared error by recursively altering $\{w_{ji}^{(l)}\}$ based on the gradient search technique. The squared error derivative associated with the jth node in layer l is defined as

$$\delta_j^{(l)} = -\frac{1}{2} \frac{\partial e^2}{\partial S_j^{(l)}}. \tag{4}$$

These derivatives may be found out as

$$\delta_j^{(l)} = \begin{cases} \rho'(S_j^{(l)}) \cdot e_j & \text{for } l = L \\ \rho'(S_j^{(l)}) \cdot \sum_{i=1}^{n_{l+1}} w_{ij}^{(l+1)} \cdot \delta_i^{(l+1)} & \\ \qquad \text{for } l = L-1, L-2, \cdots, 1. \end{cases} \tag{5}$$

Finally, at the kth instant the weights of the MLP are updated as follows:

$$w_{ji}^{(l)}(k+1) = w_{ji}^{(l)}(k) + \Delta_{ji}^{(l)}(k) \quad \text{and}$$
$$\Delta_{ji}^{(l)}(k) = \mu \delta_j^{(l)} x_i^{(l-1)} + \gamma \Delta_{ji}^{(l)}(k-1) \tag{6}$$

where μ and γ denote learning rate and momentum rate parameters, respectively.

IV. Mathematical Analysis of FLANN

The learning of an ANN may be considered as approximating or interpolating a continuous, multivariate function $f(X)$ by an approximating function $f_W(X)$. In the FLANN, a set of basis

Authorized licensed use limited to: MALAVIYA NATIONAL INSTITUTE OF TECHNOLOGY. Downloaded on March 30,2022 at 10:12:57 UTC from IEEE Xplore. Restrictions apply.

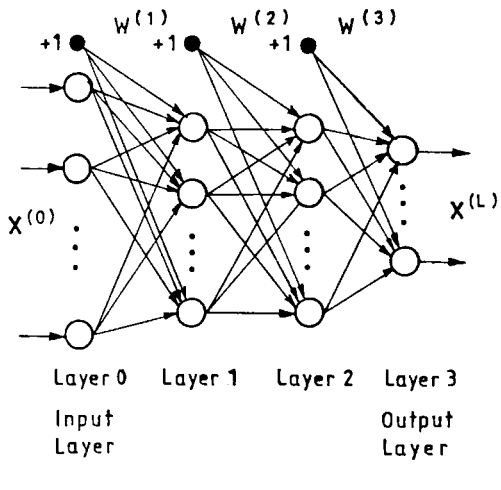

Fig. 2. The structure of an multilayer perceptron.

functions Φ and a fixed number of weight parameters W are used to represent $f_W(X)$. With a specific choice of a set of basis functions, the problem is then to find the weight parameters W that provides the best possible approximation of f on the set of input–output examples. The theory behind the FLANN for the purpose of multidimensional function approximation has been discussed in [14] and [17] and is analyzed below.

A. Structure of the FLANN

Let us consider a set of basis functions $\mathcal{B} = \{\phi_i \in \mathcal{L}(A)\}_{i \in \mathcal{I}}$ with the following properties: 1) $\phi_1 = 1$, 2) the subset $\mathcal{B}_j = \{\phi_i \in \mathcal{B}\}_{i=1}^{j}$ is linearly independent set, i.e., if $\Sigma_{i=1}^{N} w_i \phi_i = 0$, then $w_i = 0$ for all $i = 1, 2, \cdots, j$, and 3) $\sup_j [\Sigma_{i=1}^{j} \|\phi_i\|_A^2]^{1/2} < \infty$. Let $\mathcal{B}_N = \{\phi\}_{i=1}^{N}$ be a set of basis functions to be considered for the FLANN as shown in Fig. 3(a). Thus, the FLANN consists of N basis functions $\{\phi_1, \phi_2, \cdots, \phi_N\} \in \mathcal{B}_N$ with the following input–output relationship for the jth output

$$\hat{y}_j = \rho(S_j); S_j = \sum_{i=1}^{N} w_{ji} \phi_i(X), \tag{7}$$

where $X \in A \subset \mathcal{R}^n$, i.e., $X = [x_1 x_2 \cdots x_n]^T$ is the input pattern vector, $\hat{y} \in \mathcal{R}^m$, i.e., $\hat{y} = [\hat{y}_1 \hat{y}_2 \cdots \hat{y}_m]^T$ is the output vector and $w_j = [w_{j1} w_{j2} \cdots w_{jN}]$ is the weight vector associated with the jth output of the FLANN. The nonlinear function $\rho(\cdot) = \tanh(\cdot)$.

Considering the m-dimensional output vector, (7) may be written as

$$S = W\Phi \tag{8}$$

where W is a $(m \times N)$ weight matrix of the FLANN given by $W = [w_1 w_2 \cdots w_m]^T$, $\phi = [\phi_1(X)\phi_2(X) \cdots \phi_N(X)]^T$ is the basis function vector, and $S = [S_1 S_2 \cdots S_N]^T$ is a matrix of linear outputs of the FLANN. The m-dimensional output vector $\hat{y}$ may be given by

$$\hat{y} = \rho(S) = f_W(X). \tag{9}$$

B. Learning with the FLANN

Referring to Fig. 3(b), let there be K number of input–output pattern pairs to be learned by the FLANN. Let the input pattern vector X is of dimension n and for ease of understanding, let the output, y be a scalar, i.e., $m = 1$. Each of the input pattern is passed

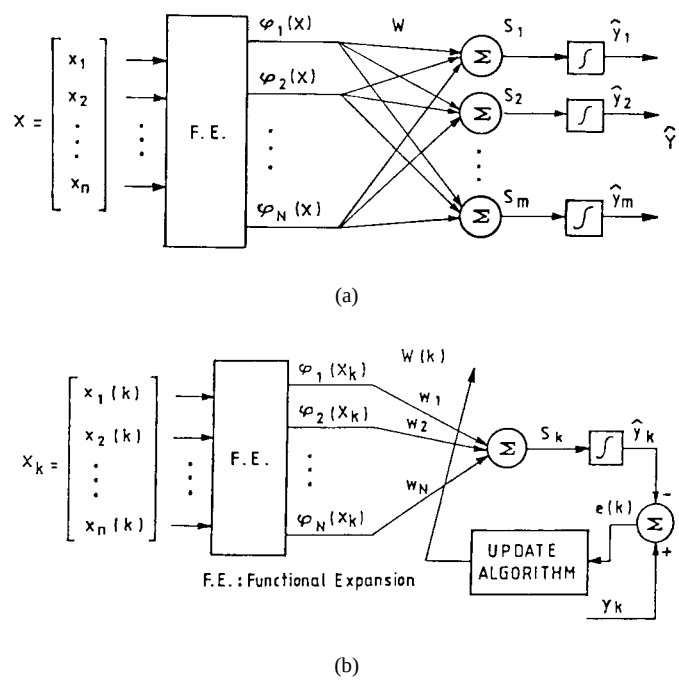

Fig. 3. The structure of a functional link ANN (a) general structure and (b) with a single output node.

through a functional expansion block producing a corresponding N-dimensional $(N \geq n)$ expanded vector. In this case, the dimension of the weight matrix is of $1 \times N$ and hence, the individual weights are represented by a single subscript. Let $w = [w_1 w_2 \cdots w_N]$ be the weight vector of this FLANN. The linear weighted sum, S_k is passed through the $\tanh(\cdot)$ nonlinear function to produce the output $\hat{y}_k$ with the following relationship:

$$\hat{y}_k = \tanh(S_k), \quad \text{or,} \quad S_k = \frac{1}{2} \log_e \left(\frac{1 + \hat{y}_k}{1 - \hat{y}_k} \right). \tag{10}$$

The FLANN with a set of basis functions ϕ attempts to approximate the nonlinear function $f\colon A \subset \mathcal{R}^n \to \mathcal{R}$ using a set of K training patterns.

Authorized licensed use limited to: MALAVIYA NATIONAL INSTITUTE OF TECHNOLOGY. Downloaded on March 30,2022 at 10:12:57 UTC from IEEE Xplore. Restrictions apply.

Considering all K patterns, input–output relationship may be expressed as

$$\Phi w^T = S, \tag{11}$$

where Φ is a $K \times N$-dimensional matrix given by $\Phi = [\phi(X_1)\phi(X_2)\cdots\phi(X_K)]^T$ and S is a K-dimensional vector given by $S = [S_1 S_2 \cdots S_K]^T$. Thus, from (11) it is evident that finding the weights of the FLANN requires the solution of K number of simultaneous equations. The number of basis functions, N is so chosen that $K \leq N$. Now, depending on the value of K and N, two cases may arise.

Case I: $K = N$. If the determinant of Φ, i.e., $Det\Phi \neq 0$, the weight solution is given by $w^T = \Phi^{-1}S$.

Case II: $K < N$. The matrix Φ may be partitioned to obtain a matrix of Φ_F of dimension $K \times K$. Let w be modified to w_F such that $w_i = 0$ for $i > K$. If $Det\Phi_F \neq 0$, then the weight solution is given by $w_F^T = \Phi_F^{-1}S$. The FLANN obtains the weight solution iteratively by using the training algorithm to be described below.

C. The Learning Algorithm

Let K number of patterns be applied to the network in a sequence repeatedly. Let the training sequence be denoted by $\{X_k, y_k\}$ and the weight of the network be $W(k)$, where k is the discrete time index given by $k = \kappa + \lambda K$, for $\lambda = 0, 1, 2, \cdots$, and $\kappa = 1, 2, \cdots, K$. Referring to (7) the jth output of the FLANN at time k is given by

$$\begin{aligned}\hat{y}_j(k) &= \rho\left(\sum_{i=1}^{N} w_{ji}(k)\phi_i(X_k)\right)\\ &= \rho(w_j(k)\phi^T(X_k))\end{aligned} \tag{12}$$

for all $X \in A$ and $j = 1, 2, \cdots, m$, where $\phi(X_k) = [\phi_1(X_k)\phi_2(X_k)\cdots\phi_N(X_k)]$. Let the corresponding error be denoted by $e_j(k) = y_j(k) - \hat{y}_j(k)$.

Using the BP algorithm (6) for a single layer, the update rule for all the weights of the FLANN is given by

$$W(k+1) = W(k) + \mu\delta(k)\phi(X_k) \tag{13}$$

where $W(k) = [w_1(k)w_2(k)\cdots w_m(k)]^T$ is the $m \times N$ dimensional weight matrix of the FLANN at the kth time instant, $\delta(k) = [\delta_1(k)\delta_2(k)\cdots\delta_m(k)]^T$, and $[\delta_j(k) = (1 - \hat{y}_j(k)^2)e_j(k)]$.

D. Motivation for Using Trigonometric Polynomials

From (11) it may be seen that the condition for existence of weight solution depends on the existence of inverse of the matrix Φ. This can be assured only if the matrix equation (11) is linearly independent and this may be achieved by the use of suitable orthogonal polynomials for functional expansion. The examples of which include Legendre, Chebyshev and trigonometric polynomials. Besides orthogonal functions, other functions which have been used successfully for the purpose of multidimensional functional approximation include sigmoid functions [8] and Gaussian functions [3]. Basically, an MLP uses sigmoid functions for nonlinear mapping between the input–output space.

Some of the advantages of using trigonometric polynomials for use in the functional expansion are explained below. Of all the polynomials of Nth order with respect to an orthonormal system $\{\phi_i(u)\}_{i=1}^N$ the best approximation in the metric space $\mathcal{L}^2$ is given by the Nth partial sum of its Fourier series with respect this system Thus, the trigonometric polynomial basis functions given by $\{1, \cos(\pi u), \sin(\pi u), \cos(2\pi u), \sin(2\pi u), \cdots, \cos(N\pi u), \sin(N\pi u)\}$ provides a compact representation of the function in the mean square sense. However, when the outer product terms were used along with the trigonometric polynomials for functional expansion, better results were obtained in the case of learning of a two-variable function [12].

TABLE I
COMPARISON OF COMPUTATIONAL COMPLEXITY BETWEEN AN L-LAYER MLP AND A FLANN IN ONE ITERATION WITH BP ALGORITHM

Operations	MLP	FLANN
Addition	$3\sum_{i=0}^{L-1} n_i n_{i+1} + 3n_L - n_0 n_1$	$2n_1(n_0+1) + n_1$
Multiplication	$4\sum_{i=0}^{L-1} n_i n_{i+1} + 3\sum_{i=1}^{L} n_i - n_0 n_1 + 2n_L$	$3n_1(n_0+1) + n_0$
$\tanh(\cdot)$	$\sum_{i=1}^{L} n_i$	n_1
$\cos(\cdot)/\sin(\cdot)$	—	n_0

E. Computational Complexity

Here, we present a comparison of computational complexity between an MLP and a FLANN structure trained by the BP algorithm. Let us consider an L-layer MLP with n_l number of nodes (excluding the threshold unit) in layer $l, l = 0, 1, \cdots, L$, where n_0 and n_L are the number of nodes in the input layer and output layer, respectively. Three basic computations, i.e., the addition, the multiplication and the computation of $\tanh(\cdot)$ are involved for updating the weights of an MLP. In the case of FLANN, in addition, computations of $\cos(\cdot)$ and $\sin(\cdot)$ are also involved. The computations in the network are due to

1) forward calculation to find the activation value of all nodes of the entire network;
2) back error propagation for calculation of square error derivatives;
3) updating of the weights of the entire network.

The total number of weights to be updated in one iteration in an MLP structure is given by $(\Sigma_{l=0}^{L-1}(n_l+1)n_{l+1})$. Whereas in the case of a FLANN the same is only (n_0+1). Since hidden layer does not exist in a FLANN, the computational complexity is drastically reduced in comparison to that of an MLP. A comparison of computational load in one iteration, for an MLP and a FLANN structure is provided in Table I.

V. SIMULATION STUDIES

Extensive simulation studies were carried out with several examples for static as well as nonlinear dynamic systems. We have compared the performance of the proposed FLANN structure with that of the MLP structure for this problem mainly by taking system examples reported by Narendra and Parthasarathy [9], [10].

A. Static Systems

Here, different nonlinear static systems are chosen to examine the approximation capabilities of the MLP and the FLANN. In all the simulation studies reported in this paper, a three-layer MLP structure with 20 and ten nodes (excluding the threshold unit) in the first and second layers respectively and one input node and one output node was chosen for the purpose of identification of both static and dynamic systems. The same MLP structure was utilized for simulation studies as reported in [9] and it has total of 261 weights, which are to be updated in one iteration during learning. Where as, in a FLANN, the number of input nodes differ depending on system model chosen. In static identification, the FLANN structure has 14 number of input nodes. Thus, it has only 15 weights including the threshold

Authorized licensed use limited to: MALAVIYA NATIONAL INSTITUTE OF TECHNOLOGY. Downloaded on March 30,2022 at 10:12:57 UTC from IEEE Xplore. Restrictions apply.

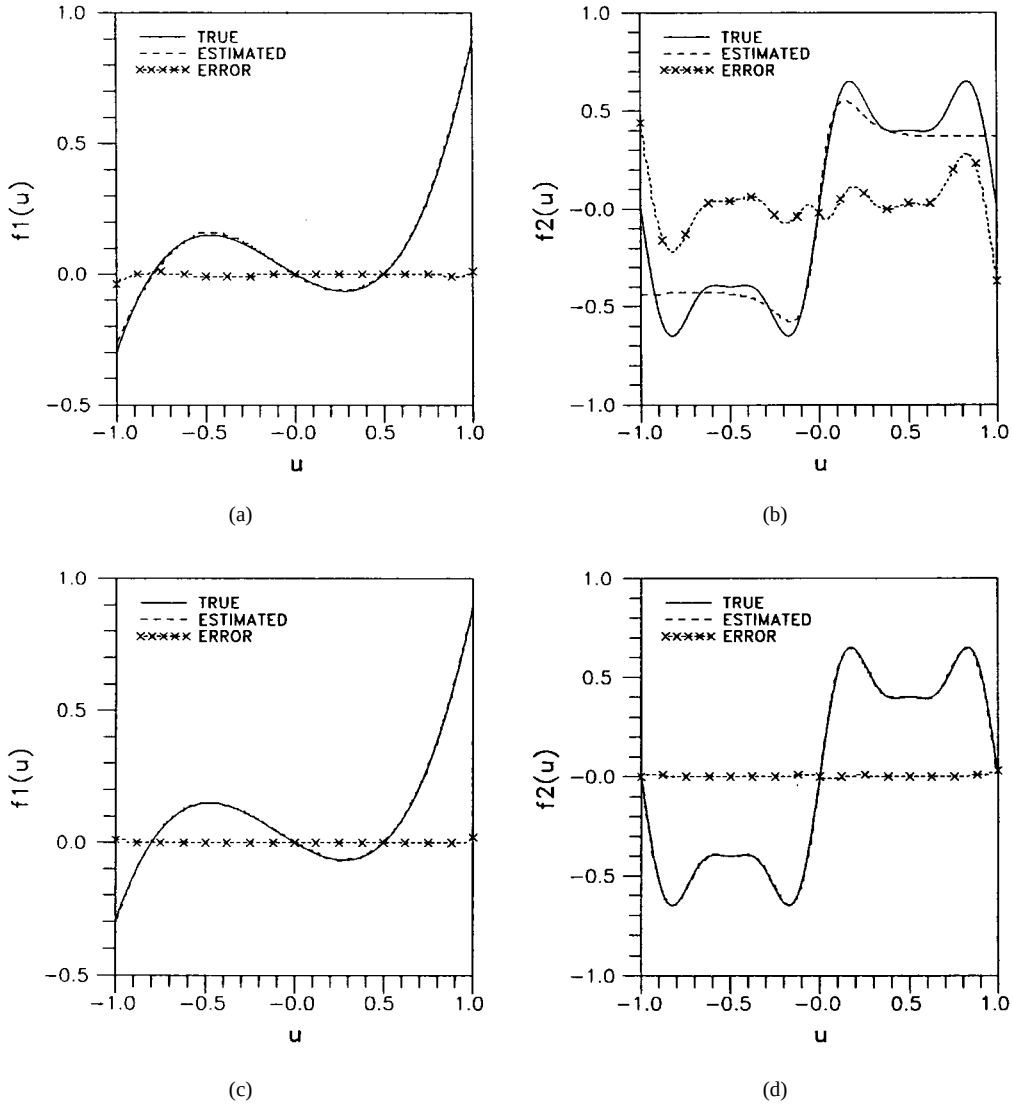

Fig. 4. Identification of static maps: (a) f_1 using MLP, (b) f_2 using MLP, (c) f_1 using FLANN, and (d) f_2 using FLANN.

unit, which are to be updated in one iteration. The input pattern was expanded by using trigonometric polynomials, i.e., by using $\cos(n\pi u)$ and $\sin(n\pi u)$, for $n = 0, 1, 2, \cdots$. In some cases, the cross product terms were also included in the functional expansion. The nonlinearity used in a node of the MLP and the FLANN is the $\tanh(\cdot)$ function. The four functions considered for this study are as follows [10]:

$$\begin{aligned}
&(a) \quad f_1(u) = u^3 + 0.3u^2 - 0.4u,\\
&(b) \quad f_2(u) = 0.6\sin(\pi u) + 0.3\sin(3\pi u) + 0.1\sin(5\pi u),\\
&(c) \quad f_3(u) = \frac{4.0u^3 - 1.2u^2 - 3.0u + 1.2}{0.4u^5 + 0.8u^4 - 1.2u^3 + 0.2u^2 - 3.0},\\
&(d) \quad f_4(u) = 0.5\sin^3(\pi u) - \frac{2.0}{u^3 + 2.0} - 0.1\cos(4\pi u)\\
&\qquad\qquad + 1.125. \qquad (14)
\end{aligned}$$

The scheme for the identification of static and dynamic systems is shown in Fig. 1. Here, the system P, belongs to either a static map or a dynamic system. The output of the ANN model $\hat{P}(u)$ and the output of the system $P(u)$ is compared to produce an error e, which is then utilized to update the weights of the model. The BP algorithm was used to adapt the weights of both the ANN structures. The input u was a random signal drawn from an uniform distribution in the interval $[-1, 1]$. Both the convergence parameter μ and the momentum term γ were set to 0.1. Both the MLP and the FLANN were trained for 50 000 iterations, after which the weights of the ANN were stored for testing.

The results of identification of f_1 and f_2 (14) are shown in Fig. 4. Here, the system output and the model output are represented by $f(u)$ and $\hat{f}(u)$ and marked in these figures as "true" and "estimated" respectively. From these figures, it may be seen that the performance of the MLP with $f_1(u)$ is quite satisfactory, where as, with $f_2(u)$ it is not very good. For the FLANN structure, quite close agreement between the system output and the model output is evident. In fact, the modeling error of the FLANN structure is found to be much less than that of the MLP structure for all the four nonlinear functions considered.

B. Dynamic Systems

In the following we have undertaken simulation studies of nonlinear dynamic systems with the help of several examples using Fig. 1. The nonlinear functions given in (14) was used in the characterization of the dynamic plants. In each example, one particular model of the

Authorized licensed use limited to: MALAVIYA NATIONAL INSTITUTE OF TECHNOLOGY. Downloaded on March 30,2022 at 10:12:57 UTC from IEEE Xplore. Restrictions apply.

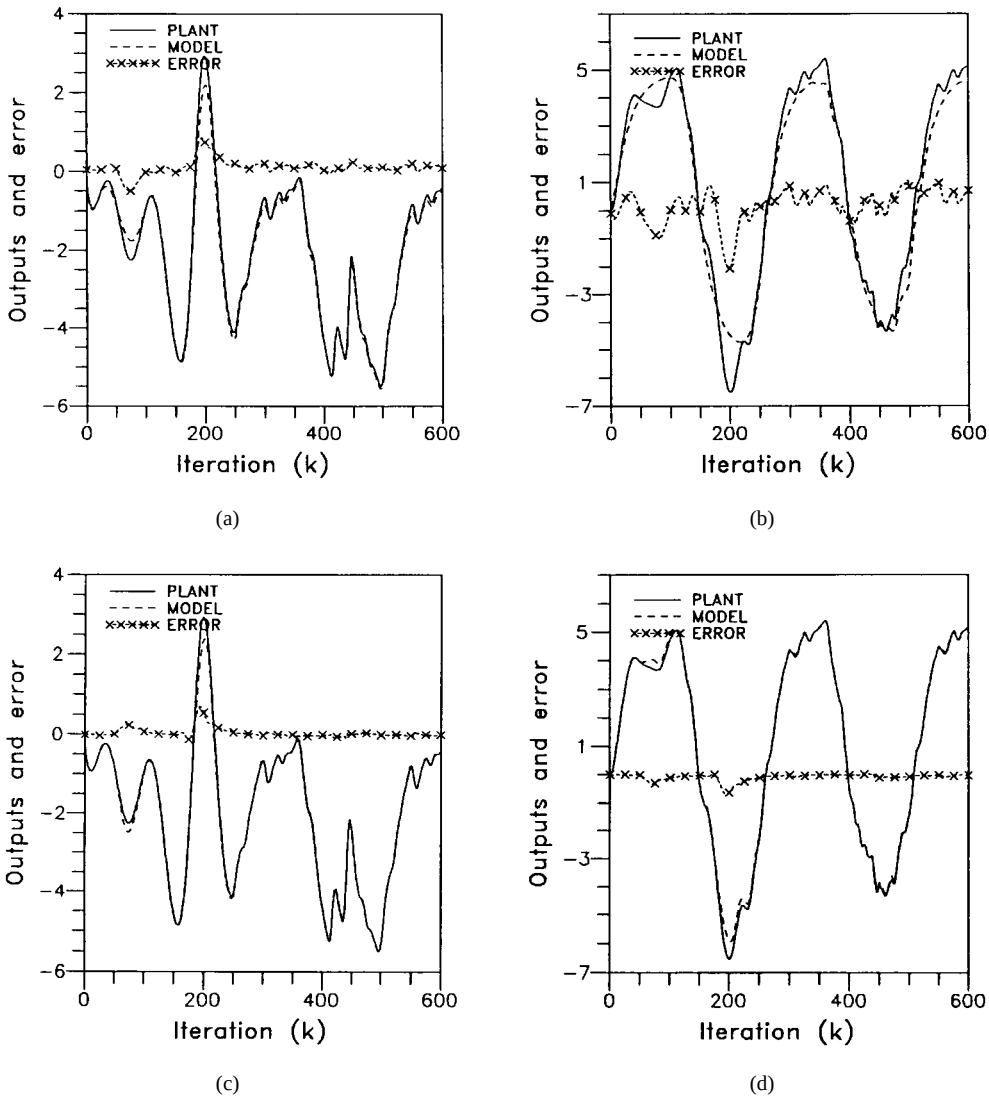

Fig. 5. Identification of the second order plant (Example 1): (a) with f_3 using MLP, (b) with f_4 using MLP, (c) with f_3 using FLANN, (d) with f_4 using FLANN.

unknown system is considered. The input to the plant was taken from an uniformly distributed random signal over the interval $[-1, 1]$. The convergence factor μ and momentum factor γ were chosen differently for different examples. The adaptation continues for 50 000 iterations during which the series-parallel scheme of identification was used. Then, the adaptation was stopped and the network was used for testing for identification using the parallel scheme. This procedure of training and testing was carried out for all examples illustrated here. The testing of the network models was undertaken by presenting a sinusoidal input to the identified model given by

$$u(k) = \begin{cases} \sin\left(\dfrac{2\pi k}{250}\right) \\ \qquad \text{for } k \leq 250 \\ 0.8\sin\left(\dfrac{2\pi k}{250}\right) + 0.2\sin\left(\dfrac{2\pi k}{25}\right) \\ \qquad \text{for } k > 250. \end{cases} \tag{15}$$

Performance comparison between an MLP and a FLANN structure in terms of, estimated output of the unknown plant and modeling error has been carried out.

Example 1: In the first example of identification of nonlinear dynamic systems, we consider a system described by the difference equation of Model 1 given in (2). The plant is assumed to be of second order and is described by the following difference equation:

$$y_p(k+1) = 0.3y_p(k) + 0.6y_p(k-1) + g[u(k)]. \tag{16}$$

where the nonlinear function g is unknown but $\alpha_0 = 0.3$ and $\alpha_1 = 0.6$ are assumed to be known. The unknown function g was taken from the nonlinear functions of (14). To identify the plant, a series-parallel model was considered which is governed by the difference equation

$$\hat{y}_p(k+1) = 0.3y_p(k) + 0.6y_p(k-1) + \mathcal{N}[u(k)]. \tag{17}$$

The MLP used for this purpose has $\{1\text{–}20\text{–}10\text{–}1\}$ structure. The input was expanded to 14 terms by the trigonometric polynomials and used in the FLANN. Both μ and γ were chosen to be 0.1 for the two ANN structures. The results of identification (16) with nonlinear functions f_3 and f_4 of (14) are shown in Fig. 5.

Example 2: In this example, the plant to be identified is of Model 2 of (2) and is described by the following second order difference equation

$$y_p(k+1) = f[y_p(k), y_p(k-1)] + u(k). \tag{18}$$

Authorized licensed use limited to: MALAVIYA NATIONAL INSTITUTE OF TECHNOLOGY. Downloaded on March 30,2022 at 10:12:57 UTC from IEEE Xplore. Restrictions apply.

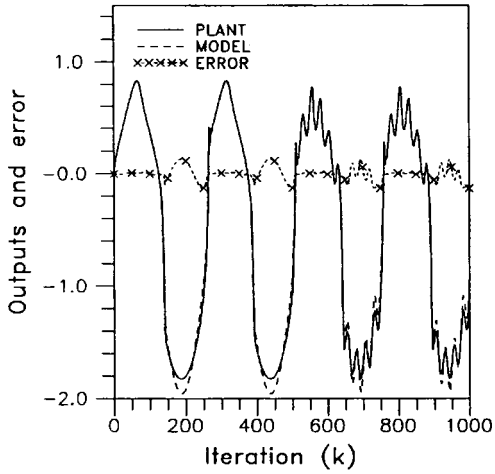

(a)

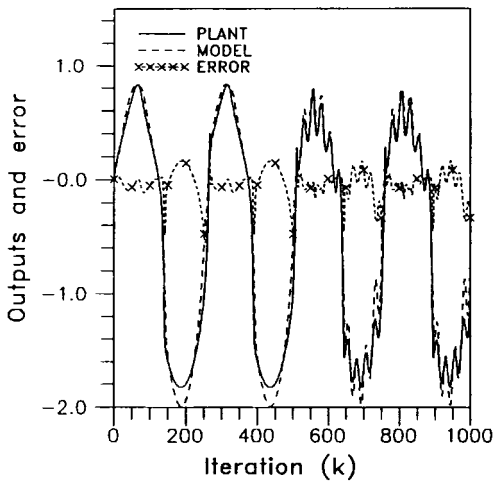

(b)

Fig. 6. Identification of nonlinear plant (Example 2) (a) using MLP and (b) using FLANN.

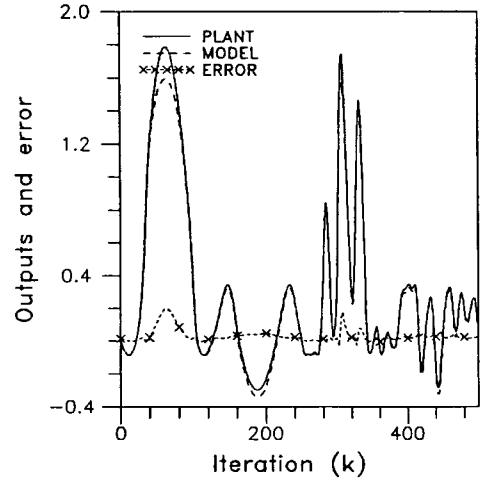

(a)

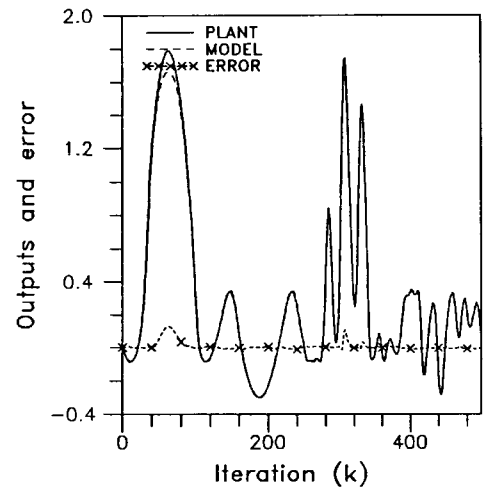

(b)

Fig. 7. Identification of nonlinear plant (Example 3) (a) using MLP and (b) using FLANN.

It is known *a priori* that the output of the plant depends only on the past two values of the output and input to the plant at the previous instant. The function f is unknown and is given by

$$f_1(y_1, y_2) = \frac{y_1 y_2 (y_1 + 2.5)(y_1 - 1.0)}{1.0 + y_1^2 + y_2^2}. \tag{19}$$

A series-parallel scheme was adopted for the identification of this plant and is described by the difference equation

$$\hat{y}_p(k+1) = \mathcal{N}[y_p(k), y_p(k-1)] + u(k). \tag{20}$$

An MLP with $\{2\text{–}20\text{–}10\text{–}1\}$ structure was used in this example. In the FLANN structure, the two-dimensional input vector was expanded to a dimension of 24 by using trigonometric functions. The values of μ and γ used were 0.05 and 0.1 respectively for both the ANN structures. The outputs of both the plant and ANN model and corresponding error with the nonlinear functions f_1 (19) are shown in Fig. 6.

Example 3: Here, the plant model chosen belong to the Model 3 as given in (2) and is described by the following difference equation:

$$y_p(k+1) = f[y_p(k)] + g[u(k)], \tag{21}$$

where the unknown functions f and g have the following form given by

$$f(y) = \frac{y(y+0.3)}{1.0 + y^2}, \quad \text{and} \quad g(u) = u(u+0.8)(u-0.5). \tag{22}$$

The series-parallel scheme for this plant is given by the difference equation

$$\hat{y}_p(k+1) = \mathcal{N}_1[y_p(k)] + \mathcal{N}_2[u(k)], \tag{23}$$

where $\mathcal{N}_1[\cdot]$ and $\mathcal{N}_2[\cdot]$ are the two ANN's used to approximate the nonlinear functions f and g, respectively.

In the MLP, both $\mathcal{N}_1$ and $\mathcal{N}_2$ were of $\{1\text{–}20\text{–}10\text{–}1\}$ structure. In the FLANN, the expanded input vector dimensions of 14 and 24 were used for $\mathcal{N}_1$ and $\mathcal{N}_2$ respectively using trigonometric functions. Both μ and γ were chosen as 0.1 for both the ANN structures in this example. Both the plant output and ANN model output and modeling error, using the MLP and the FLANN structure are depicted in Fig. 7.

Example 4: The example of the plant chosen here, is the most general of all the examples described so far and belongs to Model 4 of (2). The difference equation governing the plant which is used in

Authorized licensed use limited to: MALAVIYA NATIONAL INSTITUTE OF TECHNOLOGY. Downloaded on March 30,2022 at 10:12:57 UTC from IEEE Xplore. Restrictions apply.

this simulation is given by

$$y_p(k+1) = f[y(k), y(k-1), y(k-2), u(k), u(k-1)] \tag{24}$$

where the unknown nonlinear function f is given by

$$f[a_1, a_2, a_3, a_4, a_5] = \frac{a_1 a_2 a_3 a_5 (a_3 - 1.0) + a_4}{1.0 + a_2^2 + a_3^2}. \tag{25}$$

The series-parallel model for identification of this plant is given by

$$\hat{y}_p(k+1) = \mathcal{N}[y_p(k), y_p(k-1), y_p(k-2), u(k), u(k-1)]. \tag{26}$$

In the case of MLP, $\mathcal{N}$ represents a $\{5\text{–}20\text{–}10\text{–}1\}$ structure. Where as, in the FLANN structure, the input $u(\cdot)$ was expanded by ten terms and the output was also expanded by ten terms by using trigonometric polynomials and some cross-product terms and then used for the identification problem. Thus, the FLANN used for this purpose had 20 input nodes and a single output node. For the two ANN structures, both the convergence parameter μ and the momentum factor γ were set at 0.1.

The outputs of the plant and the model along with their corresponding error, are shown in Fig. 8. the MLP and the FLANN structure respectively. From the simulation results (Figs. 5–8), it may be seen that the model outputs closely agree with the plant output for both the MLP and the FLANN based structures. However, the performance of the FLANN structure is superior to that of MLP as in the former ANN structure the modeling error is less in several examples.

Comparison of computational complexity between the MLP and the FLANN using BP learning algorithm is provided in Table II. Here, number of additions, multiplications, etc., needed per iteration during training period using BP algorithm are indicated for different examples studied in this paper. From this table it may be inferred that for all the selected examples in this study, the computational load on the FLANN is much less than that of the MLP.

VI. Conclusions

In this study of identification of nonlinear dynamic systems, we have proposed a novel ANN structure based on FLANN. Here, the input pattern is expanded using trigonometric polynomials and cross-product terms of the input vector. The functional expansion may be thought of analogous to the nonlinear processing of signals in the hidden layer of an MLP. This functional expansion increases the dimensionality of the input pattern and thus, creation of nonlinear decision boundaries in the multidimensional space and identification of complex nonlinear functions become simple with this network. Since, the hidden layer is absent in this structure, the computational complexity is less and thus, the learning is faster in comparison to an MLP. Therefore, this structure may be implemented for on-line applications.

Four models of nonlinear systems of increasing order of complexity have been considered here for identification purpose. Mainly by taking examples from [9] and [10], extensive simulation studies were carried out. System identification with the FLANN structure is found to be quite effective for all the four models considered here. Performance comparison between an MLP and a FLANN structure in terms of computational complexity, and modeling error between the plant and model outputs has been carried out. It is shown that the overall performance of a suitably chosen FLANN structure is superior to an MLP structure for identification of nonlinear static as well as dynamic systems. The FLANN structure may also be applied to other nonlinear signal processing applications.

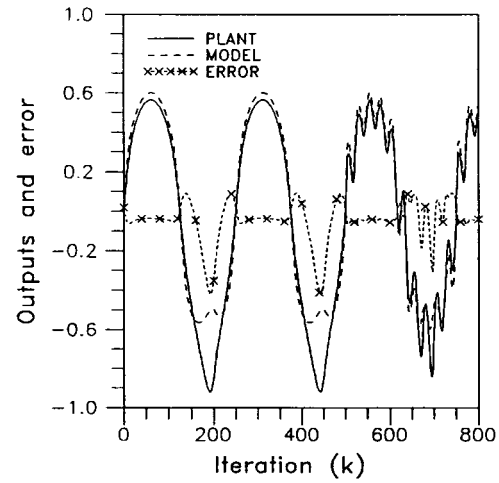

(a)

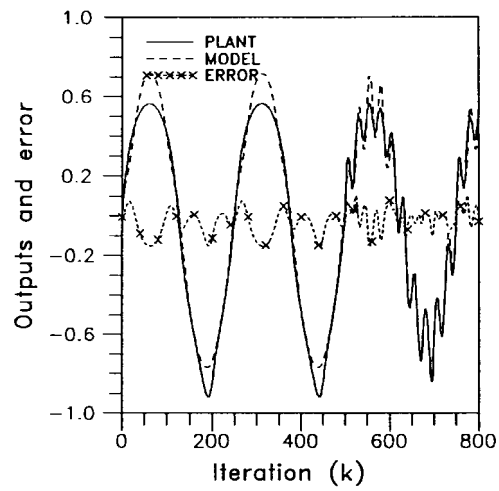

(b)

Fig. 8. Identification of nonlinear plant (Example 4) (a) using MLP and (b) using FLANN.

TABLE II
Example-Wise Comparison of Computational Complexity

Example Number	No. of operations/ iteration								No. of Weights	
	Additions		Multi.		tanh()		cos/sin			
	MLP	FLANN	MLP	FLANN	MLP	FLANN	MLP	FLANN	MLP	FLANN
Static	673	31	995	59	31	1	0	14	261	15
Ex.1	673	31	995	59	31	1	0	14	261	15
Ex.2	713	51	1055	99	31	1	0	24	281	25
Ex.3	1346	82	1990	158	62	2	0	38	522	40
Ex.4	833	43	1235	83	31	1	0	20	341	21

References

[1] S. Bhama and H. Singh, "Single layer neural networks for linear system identification using gradient descent technique," *IEEE Trans. Neural Networks*, vol. 4, pp. 884–888, Sept. 1993.

[2] N. V. Bhat *et al.*, "Modeling chemical process systems via neural computation, *IEEE Contr. Syst. Mag.*, pp. 24–29, Apr. 1990, .

Authorized licensed use limited to: MALAVIYA NATIONAL INSTITUTE OF TECHNOLOGY. Downloaded on March 30,2022 at 10:12:57 UTC from IEEE Xplore. Restrictions apply.

[3] D. S. Broomhead and D. H. Lowe, "Multivariable functional interpolation and adaptive networks," *Complex Syst.*, vol. 2, pp. 321–355, 1988.
[4] S. Chen, S. A. Billings and P. M. Grant, "Nonlinear system identification using neural networks," *Int. J. Contr.*, vol. 51, no. 6, pp. 1191–1214, 1990.——, "Recursive hybrid algorithm for nonlinear system identification using radial basis function networks," *Int. J. Contr.*, vol. 55, no. 5, pp. 1051–1070, 1992.
[5] S. Chen and S. A. Billings, "Neural networks for nonlinear dynamic system modeling and identification," *Int. J. Contr.*, vol. 56, no. 2, pp. 319–346, 1992.
[6] S. V. T. Elanayar and Y. C. Shin, "Radial basis function neural network for approximation and estimation of nonlinear stochastic dynamic systems," *IEEE Trans. Neural Networks*, vol. 5, pp. 594–603, July 1994.
[7] L. K. Jones, "Constructive approximations for neural networks by sigmoidal functions," *Proc. IEEE*, vol. 78, pp. 1586–1589, Oct. 1990.
[8] K. S. Narendra and K. Parthasarathy, "Identification and control of dynamical systems using neural networks," *IEEE Trans. Neural Networks*, vol. 1, pp. 4–27, Mar. 1990.
[9] ——, "Neural networks and dynamical systems, Part II: Identification," Tech. Rep. 8902, Center Syst. Sci., Dept. Elect. Eng., Yale Univ., New Haven, CT, Feb. 1989.
[10] D. H. Nguyen and B. Widrow, "Neural networks for self-learning control systems," *Int. J. Contr.*, vol. 54, no. 6, pp. 1439–1451, 1991.
[11] Y.-H. Pao, *Adaptive Pattern Recognition and Neural Networks*. Reading, MA: Addison-Wesley, 1989.
[12] Y.-H. Pao, S. M. Phillips and D. J. Sobajic, "Neural-net computing and intelligent control systems," *Int. J. Contr.*, vol. 56, no. 2, pp. 263–289, 1992.
[13] J. C. Patra, "Some studies on artificial neural networks for signal processing applications," Ph.D. dissertation, Indian Inst. Technol., Kharagpur, Dec. 1996.
[14] J. C. Patra and R. N. Pal, "A functional link artificial neural network for adaptive channel equalization," *Signal Process.*, vol. 43, pp. 181–195, May 1995.
[15] J. C. Patra, R. N. Pal and B. N. Chatterji, "FLANN-based identification of nonlinear systems," *Proc. 5th Eur. Congr. Intelligent Techniques Soft Computing (EUFIT'97)*, Sept. 1997, Aachen, Germany, vol. 1, pp. 454–458.
[16] N. Sadegh, "A perceptron based neural network for identification and control of nonlinear systems," *IEEE Trans. Neural Networks*, vol. 4, pp. 982–988, Nov. 1993.
[17] T. Yamada and T. Yabuta, "Dynamic system identification using neural networks," *IEEE Trans. Syst., Man, Cybern.*, vol. 23, pp. 204–211, Jan./Feb. 1993.
[18] S. S. Yang and C. S. Tseng, "An orthonormal neural network for function approximation," *IEEE Trans. Syst., Man, Cybern. B*, vol. 26, pp. 779–785, Oct. 1996.

Nonlinear Channel Equalization for QAM Signal Constellation Using Artificial Neural Networks

Jagdish C. Patra, Ranendra N. Pal,
Rameswar Baliarsingh, and Ganapati Panda

***Abstract*—Application of artificial neural networks (ANN's) to adaptive channel equalization in a digital communication system with 4-QAM signal constellation is reported in this paper. A novel computationally efficient single layer functional link ANN (FLANN) is proposed for this purpose. This network has a simple structure in which the nonlinearity is introduced by functional expansion of the input pattern by trigonometric polynomials. Because of input pattern enhancement, the FLANN is capable of forming arbitrarily nonlinear decision boundaries and can perform complex pattern classification tasks. Considering channel equalization as a nonlinear classification problem, the FLANN has been utilized for nonlinear channel equalization. The performance of the FLANN is compared with two other ANN structures [a multilayer perceptron (MLP) and a polynomial perceptron network (PPN)] along with a conventional linear LMS-based equalizer for different linear and nonlinear channel models. The effect of eigenvalue ratio (EVR) of input correlation matrix on the equalizer performance has been studied. The comparison of computational complexity involved for the three ANN structures is also provided.**

***Index Terms*— Functional link artificial neural networks, multilayer perceptron, nonlinear channel equalization, polynomial perceptron, QAM signals.**

I. Introduction

For high-speed digital data transmission over a communication channel effectively, the adverse effects of the dispersive channel causing intersymbol interference (ISI), the nonlinearities introduced by the modulation/demodulation process and the noise generated in the system are to be suitably compensated. The performance of the linear channel equalizers employing a linear filter with FIR or lattice structure and using a least mean square (LMS) or recursive least-squares (RLS) algorithm is limited specially when the nonlinear distortion is severe. In such cases, nonlinear equalizer structures may be conveniently employed with added advantage in terms of lower bit error rate (BER), lower mean square error (MSE) and higher convergence rate than those of a linear equalizer.

Artificial neural networks (ANN's) can perform complex mapping between its input and output space and are capable of forming complex decision regions with nonlinear decision boundaries. Further, because of nonlinear characteristics of the ANN's, these networks of different architecture have found successful application in channel equalization problem. One of the earliest applications of the ANN in digital communication channel equalization is reported by Siu *et al.* [13]. They have proposed a multilayer perceptron (MLP) structure for channel equalization with decision feedback and have shown that the performance of this network is superior to that of a linear equalizer trained with LMS algorithm. Using MLP structures in the problem

Manuscript received February 8, 1997; revised July 10, 1998. This paper was recommended by Associate Editor P. Borne.

J. C. Patra and G. Panda are with the Department of Applied Electronics and Instrumentation Engineering, Regional Engineering College, Rourkela 769 008, India.

R. N. Pal is with the Department of Electronics and Electrical Communication Engineering, Indian Institute of Technology, Kharagpur 721 302, India.

R. Baliarsingh is with the Department of Computer Science, Engineering and Applications, Regional Engineering College, Rourkela 769 008, India.

Publisher Item Identifier S 1083-4419(99)02294-3.

1083–4419/99$10.00 © 1999 IEEE

Authorized licensed use limited to: MALAVIYA NATIONAL INSTITUTE OF TECHNOLOGY. Downloaded on March 30,2022 at 10:12:57 UTC from IEEE Xplore. Restrictions apply.